DocuSign Envelope ID: D7057495-C319-463C-B7B6-662799CA02FD

8/17/99

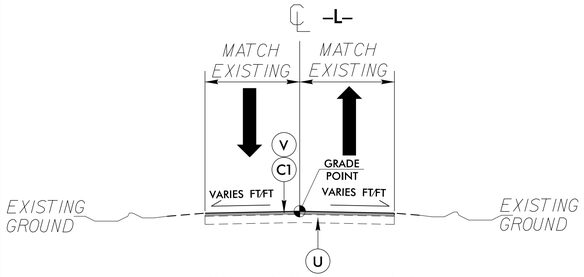

TYPICAL SECTION NO. 1

MILL –L– STA. 10+50.00 TO STA. 10+75.00
MILL –L– STA. 15+25.00 TO STA. 15+50.00

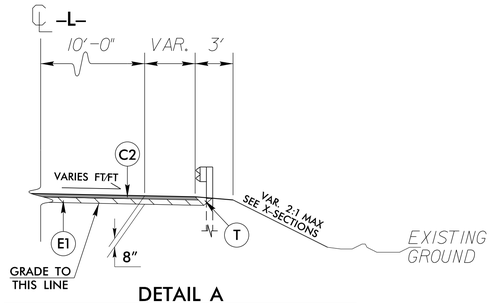

DETAIL A
GUARDRAIL

–L– STA. 12+27.57 TO 12+77.82 (LT)
–L– STA. 13+28.00 TO 13+78.69 (LT)
–L– STA. 11+52.00 TO 12+92.28 (RT)
–L– STA. 13+49.48 TO 14+27.97 (RT)

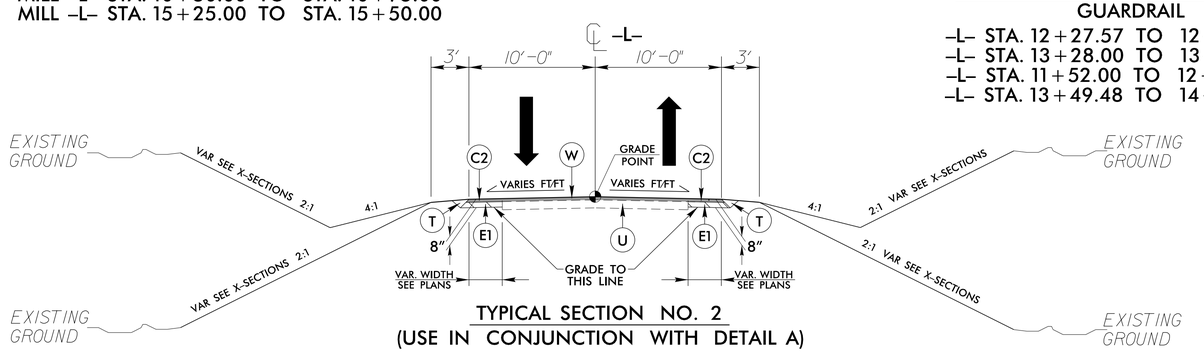

TYPICAL SECTION NO. 2
(USE IN CONJUNCTION WITH DETAIL A)

–L– STA. 10+75.00 TO STA. 11+50.00
–L– STA. 14+00.00 TO STA. 15+25.00

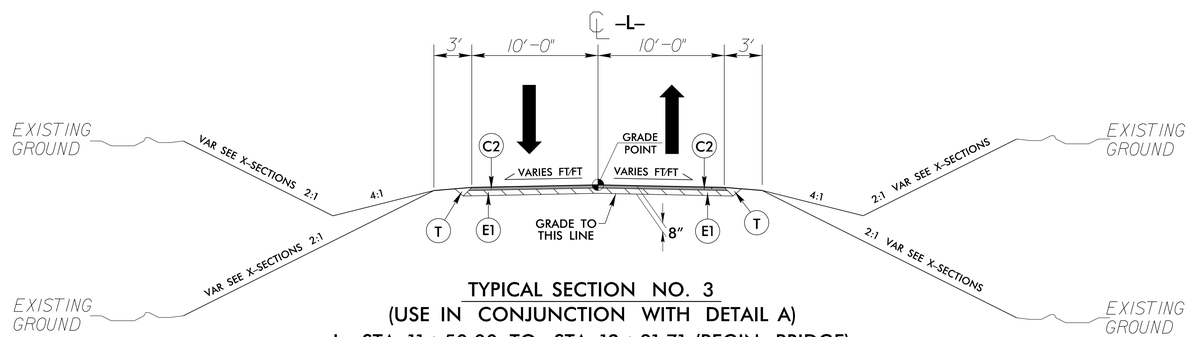

TYPICAL SECTION NO. 3
(USE IN CONJUNCTION WITH DETAIL A)

–L– STA. 11+50.00 TO STA. 12+81.71 (BEGIN BRIDGE)
–L– STA. 13+39.47 (END BRIDGE) TO STA. 14+00.00

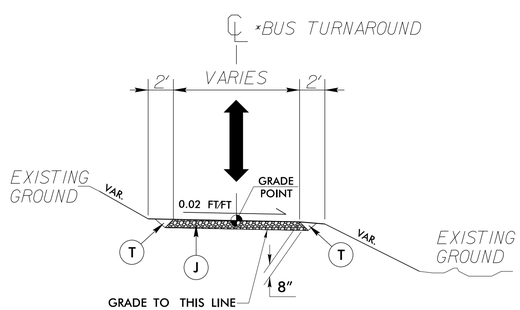

TYPICAL SECTION NO. 4

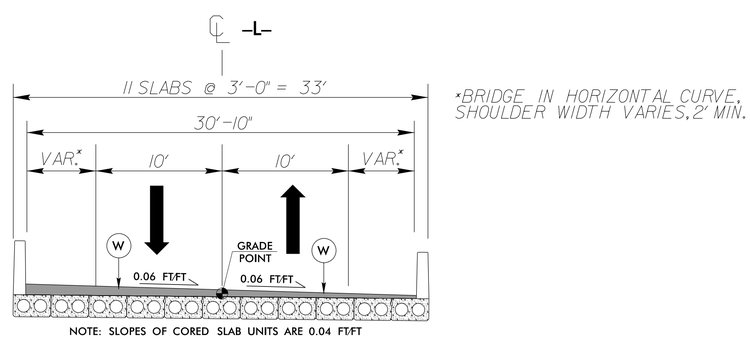

NOTE: SLOPES OF CORED SLAB UNITS ARE 0.04 FT/FT

BRIDGE TYPICAL SECTION
–L– STA. 12+81.71 TO STA. 13+39.47

wsp
434 Fayetteville Street Suite 1500
Raleigh, NC 27601 - 919.836.4040
www.wspgroup.com
LICENSE NO. F-0165

PROJECT REFERENCE NO.	SHEET NO.
17BP.14.R.169	2A-1
R/W SHEET NO.	

ROADWAY DESIGN ENGINEER
10/23/2021
NORTH CAROLINA PROFESSIONAL SEAL 33290 ENGINEER ROMYELL A. TWIGHEY
DocuSigned by: Romyell A. Twigyen
5C3BA1D0D8D04D...

DOCUMENT NOT CONSIDERED FINAL UNLESS ALL SIGNATURES COMPLETED

PAVEMENT SCHEDULE

C1	PROP. APPROX. 1.5″ ASPHALT CONCRETE SURFACE COURSE, TYPE S9.5B, AT AN AVERAGE RATE OF 165 LBS. PER SQ. YD. IN EACH OF TWO LAYERS.
C2	PROP. APPROX. 3″ ASPHALT CONCRETE SURFACE COURSE, TYPE S9.5B, AT AN AVERAGE RATE OF 165 LBS. PER SQ. YD. IN EACH OF TWO LAYERS.
C3	PROP. VAR. DEPTH ASPHALT CONCRETE SURFACE COURSE, TYPE S9.5B, AT AN AVERAGE RATE OF 110 LBS. PER SQ. YD. PER 1″ DEPTH TO BE PLACED IN LAYERS NOT LESS THAN 1″ IN DEPTH OR GREATER THAN 1½″ IN DEPTH.
E1	PROP. APPROX. 5″ ASPHALT CONCRETE BASE COURSE, TYPE B25.0C, AT AN AVERAGE RATE OF 570 LBS. PER SQ. YD.
E2	PROP. VAR. DEPTH ASPHALT CONCRETE BASE COURSE, TYPE B25.0C, AT AN AVERAGE RATE OF 114 LBS. PER SQ. YD. PER 1″ DEPTH TO BE PLACED IN LAYERS NOT LESS THAN 3″ IN DEPTH OR GREATER THAN 5½″ IN DEPTH.
J	PROP. 8″ AGGREGATE BASE COURSE.
T	EARTH MATERIAL.
U	EXISTING PAVEMENT.
V	1½″ MILLING ASPHALT PAVEMENT
W	WEDGING (SEE DETAIL 1 THIS SHEET).

NOTES:
1. ALL SLOPES ARE 1:1 UNLESS OTHERWISE NOTED.

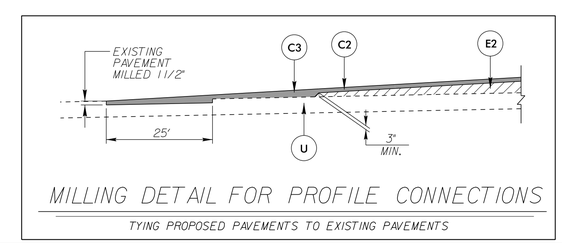

MILLING DETAIL FOR PROFILE CONNECTIONS
TYING PROPOSED PAVEMENTS TO EXISTING PAVEMENTS

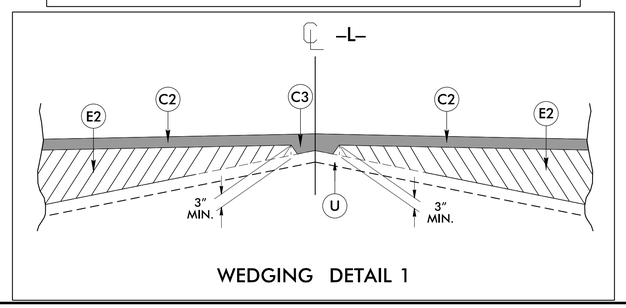

WEDGING DETAIL 1

3:48:08 PM
17BP.R169_210099_rdy_typ.dgn
10/27/2021